VGN-S52B/S62PS/S62PSY/S62S
VGN-S360/S360P

SERVICE MANUAL

Ver. 1 2005A

Revision History

Area	Model	Lineup
Japanese	Japanese	VGN-S52B/S VGN-S62PS/S∗ VGN-S62PSY∗ VGN-S62S/S∗
American	US Canadian	VGN-S360 VGN-S360P

∗ : CTO Model

Confidential

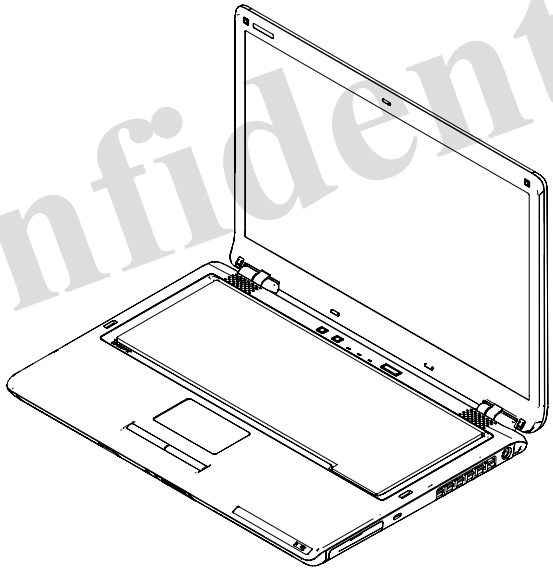

Bluetooth™

Wi Fi® CERTIFIED

MEMORY STICK™

i™ S400

VAIO

- Design and specifications are subject to change without notice.
- 本機の仕様および外観は、改良のため予告なく変更することがありますが、ご了承ください。

PERSONAL COMPUTER

SONY®

9-876-402-01

Information in this document is subject to change without notice.

Sony, VAIO and CLIE are trademarks or registered trademarks of Sony. Microsoft,Windows, Windows Media, Outlook, Bookshelf and other Microsoft products are trademarks or registered trademarks of Microsoft Corporation in the United States and other countries. The word Bluetooth and the Bluetooth logo are trademarks of Bluetooth SIG, Inc. AMD, AMD logo, AMD Duron and combinations there of, 3DNow!, are trademarks of Advanced Micro Devices, Inc. Intel Inside logo, Pentium and Celeron are trademarks or registered trademarks of Intel Corporation. Transmeta, the Transmeta logo, Crusoe Processor, the Crusoe logo and combinations there of are trademarks of Transmeta Corporation in the USA and other countries. Graffiti, HotSync, PalmModem, and Palm OS are registered trademarks, and the Hotsync logo and Palm are trademarks of Palm, Inc. or its subsidiaries. (M) and Motrola are trademarks of Motrora, Inc. Other Motrola products and services with (R) mark like Dragomball are the trademarks of Motrola, Inc.

All other names of systems, products and services in this manual are trademarks or registered trademarks of their respective owners. In this manual, the (TM) or (R) mark are not specified.

Caution Markings for Lithium/Ion Battery - The following or similar texts shall be provided on battery pack of equipment or in both the operating and the service instructions.

CAUTION: Danger of explosion if battery is incorrectly replaced. Replace only with the same or equivalent type recommended by the manufacturer. Discard used batteries according to the manufacturer's instructions.

CAUTION: The battery pack used in this device may present a fire or chemical burn hazard if mistreated. Do not disassemble, heat above 100°C (212°F) or incinerate. Dispose of used battery promptly. Keep away from children.

CAUTION: Changing the back up battery.

- Overcharging, short circuiting, reverse charging, multilati on or incineration of the cells must be avoided to prevent one or more of the following occurrences; release of toxic materials, release of hydrogen and/or oxygen gas, rise in surface temperature.
- If a cell has leaked or vented, it should be replaced immediately while avoiding to touch it without any protection.

Service and Inspection Precautions

1. Obey precautionary markings and instructions

Labels and stamps on the cabinet, chassis, and components identify are as requiring special precautions. Be sure to observe these precautions, as well as all precautions listed in the operating manual and other associated documents.

2. Use designated parts only

The set's components possess important safety characteristics, such as noncombustibility and the ability to tolerate large voltages. Be sure that replacement parts possess the same safety characteristics as the originals. Also remember that the ⚠ mark, which appears in circuit diagrams and parts lists, denotes components that have particularly important safety functions; be extra sure to use only the designated components.

3. Always follow the original design when mounting parts and routing wires

The original layout includes various safety features, such as inclusion of insulating materials (tubes and tape) and the mounting of parts above the printer board. In addition, internal wiring has been routed and clamped so as to keep it away from hot or high-voltage parts. When mounting parts or routing wires, therefore, be sure to duplicate the original layout.

4. Inspect after completing service

After servicing, inspect to make sure that all screws, components, and wiring have been returned to their original condition. Also check the area around the repair location to ensure that repair work has caused no damage, and confirm safety.

5. When replacing chip components...

Never reuse components. Also remember that the negative side of tantalum capacitors is easily damaged by heat.

6. When handling flexible print boards...

- The temperature of the soldering-iron tip should be about 270°C.
- Do not apply the tip more than three times to the same pattern.
- Handle patterns with care; never apply force.

Caution: Remember that hard disk drives are easily damaged by vibration. Always handle with care.

ATTENTION AU COMPOSANT AYANT RAPPORT À LA SÉCURITÉ!

LES COMPOSANTS IDENTIFÉS PAR UNE MARQUE ⚠ SUR LES DIAGRAMMES SCHÉMATIQUES ET LA LISTE DES PIÈCES SONT CRITIQUES POUR LA SÉCURITÉ DE FONCTIONNEMENT. NE REMPLACER CES COMPOSANTS QUE PAR DES PIÈSES SONY DONT LES NUMÉROS SONT DONNÉS DANSCE MANUEL OU DANS LES SUPPÉMENTS PUBLIÉS PAR SONY.

Confidential

TABLE OF CONTENTS

Section	Title	Page
CHAPTER 1.	**SPECIFICATIONS**	
1-1.	Specifications	1-1
		(to 1-1)
CHAPTER 2.	**BLOCK DIAGRAM**	2-1
		(to 2-1)
CHAPTER 3.	**FRAME HARNESS DIAGRAM**	3-1
		(to 3-1)
CHAPTER 4.	**EXPLODED VIEWS AND PARTS LIST**	
Palmrest		
	P-1	4-2
Main Board		
	M-1	4-4
Bottom		
	B-1	4-6
LCD		
	L-1. 13.3-inch WXGA (Brighter)	4-8
	L-2. 13.3-inch WXGA	4-10
Accessories		
	A-1	4-12
		(to 4-12)
CHAPTER 5.	**OTHERS**	
5-1.	The Barcode Label	5-1
5-2.	Replacing the CPU	5-2
		(to 5-2)

History of the changes is shown as the "Revision History" at the end of this data.

変更履歴は,“Revision History”として,本データ末に記載してあります。

Confidential

VGN-S52B/S62PS/S62PSY/S62S (J)
VGN-S360/S360P (AM)

CHAPTER 1.
SPECIFICATIONS

1-1. Specifications

	J				AM				
Model	VGN-S52B/S	VGN-S62PS/S*	VGN-S62PSY*	VGN-S62S/S*	VGN-S360P	VGN-S360			
CPU	PM/Do/725/1.60GHz	PM/Do/725/1.60GHz or PM/Do/745/1.80GHz or CelM/Do/360/1.40GHz or PM/Do/765/2.10GHz	PM/Do/725/1.60GHz or CelM/Do/360/1.40GHz or PM/Do/765/2.10GHz	PM/Do/725/1.60GHz or PM/Do/745/1.80GHz or CelM/Do/360/1.40GHz or PM/Do/765/2.10GHz	PM/Do/735/1.70GHz	PM/Do/735/1.70GHz			
Chipset	Intel 855PM	Intel 855PM	Intel 855PM	Intel 855PM	Intel 855PM	Intel 855PM			
Graphics	M9+X (32MB)	M9+X (32MB)	M9+X (32MB)	M9+X (32MB)	M11-P (64MB)	M11-P (64MB)			
LCD	13.3 WXGA (Brighter)	13.3WXGA (Brighter) or 13.3WXGA	13.3/WXGA	13.3WXGA (Brighter) or 13.3WXGA	13.3 WXGA (Brighter)	13.3 WXGA (Brighter)			
HDD	60GB	100GB or 80GB or 60GB or 40GB	40GB/2.5/4200	100GB or 80GB or 60GB or 40GB	80GB	80GB			
MEMORY (DDR333 uDIMM)	256MBx1	1GB (512MBx2) or 512MB (512MBx1) or 256MB (256MBx1)	512MB(512MBx1) or 256MB(256MBx1)	1GB (512MBx2) or 512MB (512MBx1) or 256MB (256MBx1)	512MB (512MBx1)	512MB (512MBx1)			
QUANTITY[MAX]	1GB	1GB	1GB	1GB	1GB	1GB			
OPT-DRIVE	Combo/9.5/x24	Combo/9.5/x24 or SuperMulti/9.5/x2	Combo/9.5/x24 or SuperMulti/9.5/x2	Combo/9.5/x24 or SuperMulti/9.5/x2	Combo/9.5/x24	Combo/9.5/x24			
Wireless LAN	802.11b/g	802.11b/g	802.11b/g	802.11b/g	802.11b/g	802.11b/g			
AC adaptor	PCGA-AC16V6	PCGA-AC16V6	PCGA-AC16V6	PCGA-AC16V6	VGP-AC16V8	VGP-AC16V8			
Battery	VGP-BPS2	VGP-BPS2 or VGP-BPL2	VGP-BPS2	VGP-BPS2 or VGP-BPL2	VGP-BPS2	VGP-BPS2			
Bluetooth	×	×	×	×	×	×			
Keyboard	Japanese Key Board	English Key Board or Japanese Key Board	Japanese Key Board	English Key Board or Japanese Key Board	English Key Board	English Key Board			
Color Variation	Silver	Silver	Silver	Silver	Black	Black			
OS	XP Home	XP Pro	XP Pro	XP Home	XP Pro	XP Home			
Office	2003 Personal	2003 Personal or 2003 Professional or None	2003 Personal or None	2003 Personal or 2003 Professional or None	None	None			

Model							
CPU							
Chipset							
Graphics							
LCD							
HDD							
MEMORY (DDR333 uDIMM)							
QUANTITY[MAX]							
OPT-DRIVE							
Wireless LAN							
AC adaptor							
Battery							
Bluetooth							
Keyboard							
Color Variation							
OS							
Office							

・The trademarks of registered trademarks of above table, refer to page 2.
・The model that is accompanied by asterisk (*) is the CTO model.
・本表中の商標・登録商標については，2ページをご参照ください。
・機種名に（*）がつくものはCTOモデルです。
組み合わせについてはCTO Informationをご確認ください。

CHAPTER 2.
BLOCK DIAGRAM

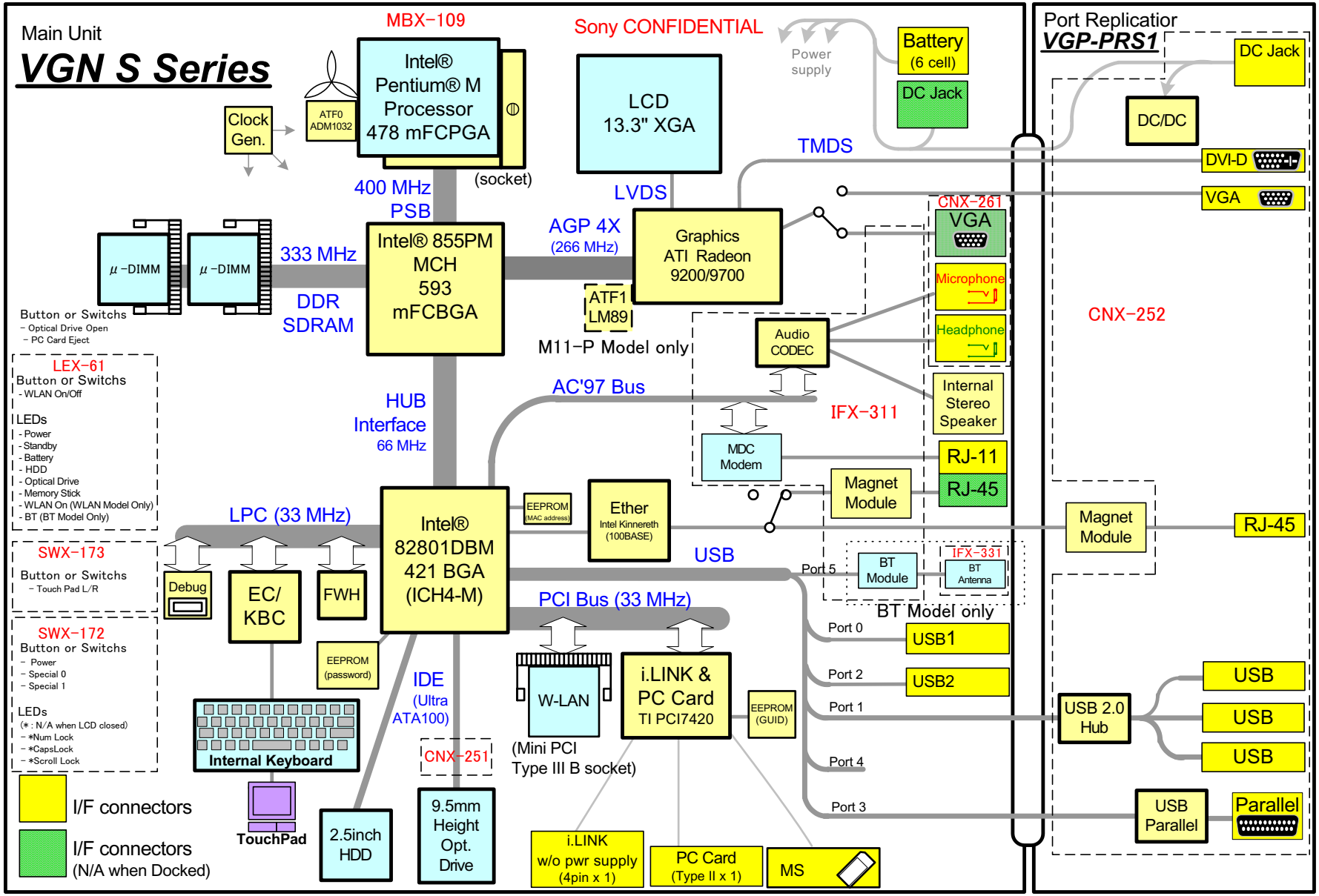

CHAPTER 3.
FRAME HARNESS DIAGRAM

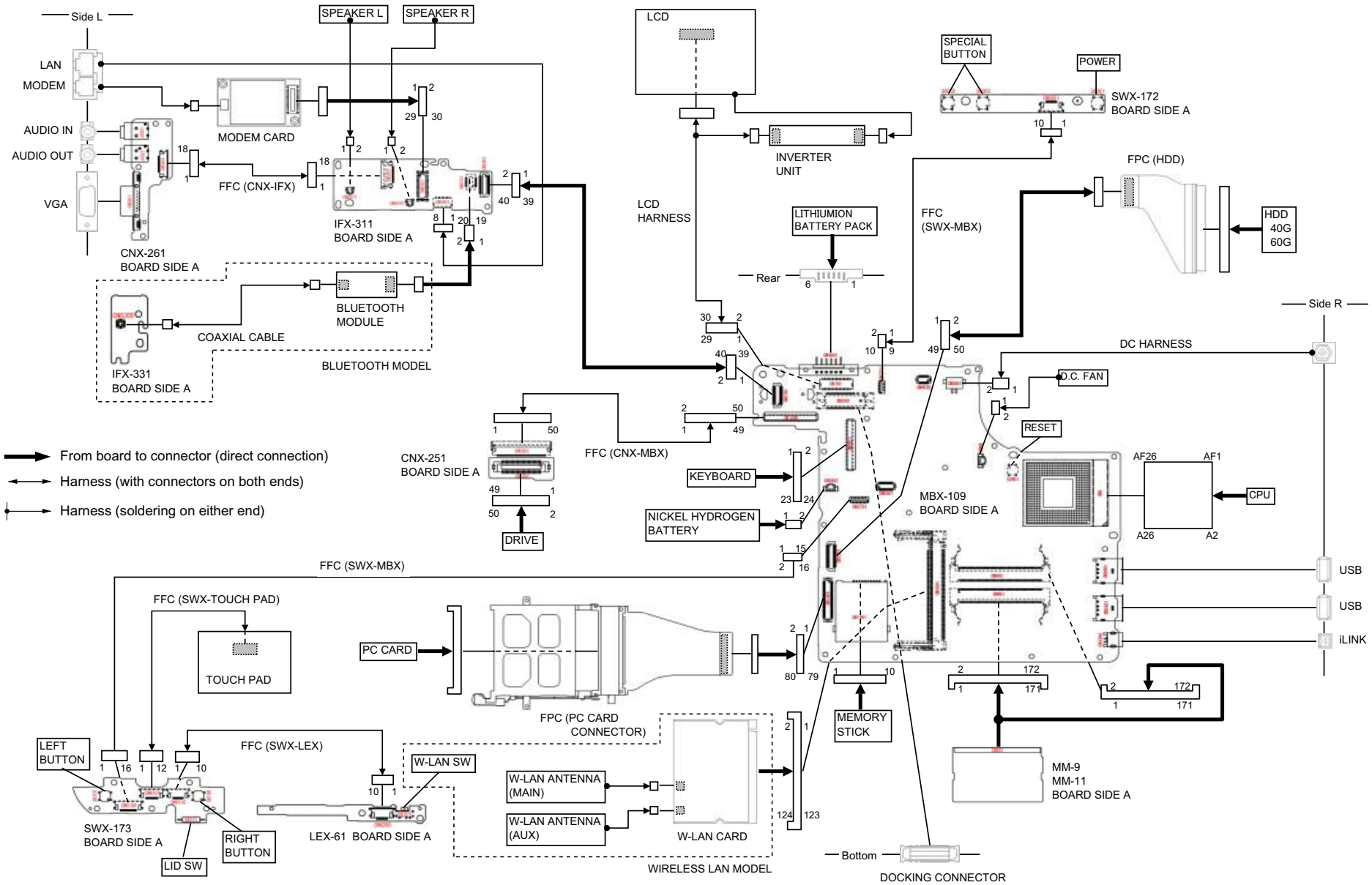

Confidential

CHAPTER 4.
EXPLODED VIEWS AND PARTS LIST

- The parts list is compiled by blocks of a palmrest and bottom etc. The sections of the parts list are different depending on the model. Please refer to list of contents shown in the below.

- 分解図と部品表は，パームレスト，ボトムなどのブロックごとに分かれています。機種によって部品表のセクションが異なりますので，詳細は右下の一覧表を参照してください。

Section — Page

Palmrest

P-1 4-2

Main Board

M-1 4-4

Bottom

B-1 4-6

LCD

L-1. 13.3-inch WXGA (Brighter) 4-8

L-2. 13.3-inch WXGA 4-10

Accessory

A-1 4-12

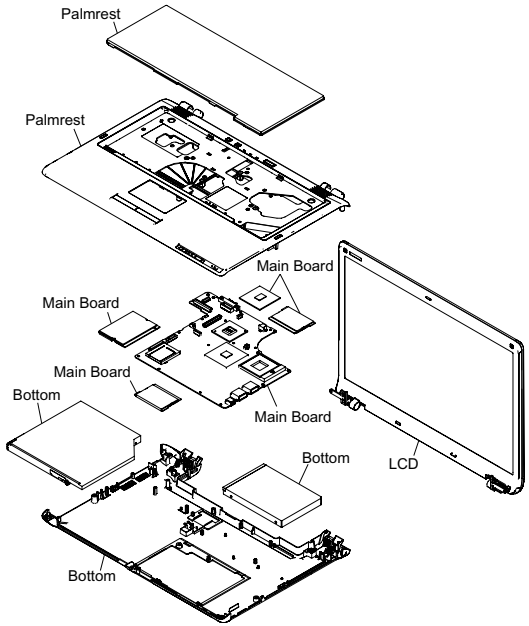

NOTE:

- Items marked "*" are not stocked since they are seldom required for routine service. Some delay should be anticipated when ordering these items.
- The mechanical parts with no reference number in the exploded views are not supplied.
- When two or more parts are shown, use the part described first as the main part.
- The parts marked " $ " are the High Value Modules (HVM).
- The parts marked " # " are the parts on which barcode label is attached. For the barcode label, refer to CHAPTER 5.
- The parts marked "&" are the "Customer Replacable Parts (CRP)" that can be replaced by Field Customer Support. Especially the parts with the <&> mark require the special attention to use them. Here fore, check first whether the desired part is one of the targetted parts of the Customer Replaceable Parts (CRP), or the non-targetted parts by referring to the exploded view.

【使用上の注意】

- *印の部品は常備在庫しておりません。
- 図面番号のない部品は供給しません。
- 併記部品の場合，上部記載部品をメイン部品として使用してください。
- 部品名称の前に$印のついた部品は，High Value Module（HVM）です。
- 商品名称の前に#印のついた部品は，バーコードラベル貼付部品です。
  バーコードラベルについてはCHAPTER 5を参照してください。
- 部品名称の前に&印のついた部品は，お客様窓口などでも交換可能なCustomer Replacable Part（CRP）です。
  特に<&>のついた部品は，使い分けが必要な部品ですので，分解図でCustomer Replacable Parts対象部品か，対象外部品かを必ず御確認ください。

		Palmrest	Main Board	Bottom	LCD	Accessory
J	S52B/S	P-1	M-1	B-1	L-1	A-1
	S62PS/S*	P-1	M-1	B-1	L-1, 2	A-1
	S62PSY*	P-1	M-1	B-1	L-2	A-1
	S62S/S*	P-1	M-1	B-1	L-1, 2	A-1
AM	S360P	P-1	M-1	B-1	L-1	A-1
	S360	P-1	M-1	B-1	L-1	A-1

* : CTO model

The components identified by mark ⚠ or dotted line with mark ⚠ are critical for safety. Replace only with part number specified.

Les composants identifiés par une marque ⚠ sont critiques pour la sécurité. Ne les remplacer que par une pièce portant le numéro spécifié.

⚠印の部品，または⚠印付きの点線で囲まれた部品は，安全性を維持するために重要な部品です。従って交換時は，必ず指定の部品を使用して下さい。

Confidential

VGN-S52B/S62PS/S62PSY/S62S (J)
VGN-S360/S360P (AM)

P-1. Palmrest

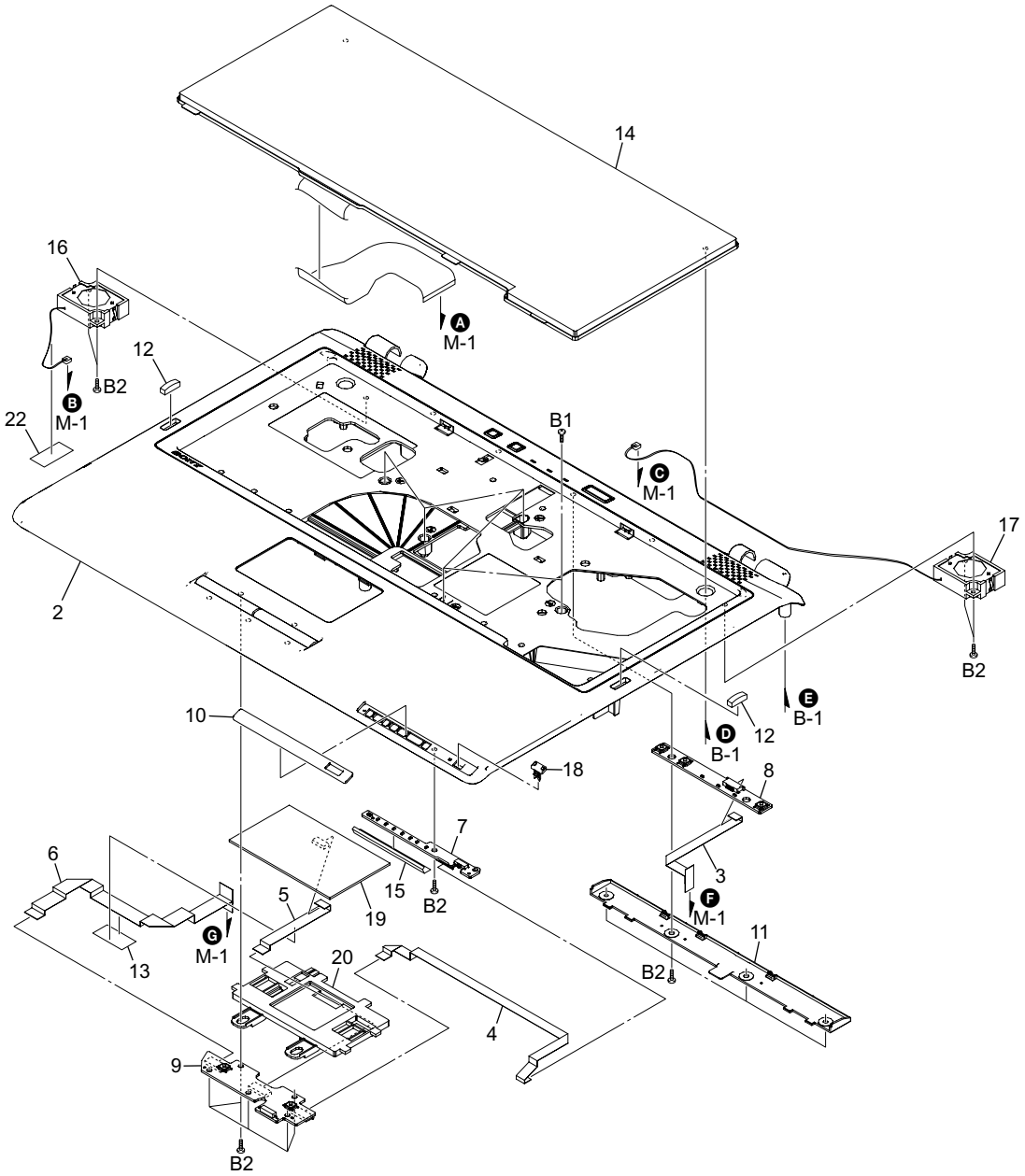
14
16
A
M-1
12
B2
B
M-1
22
B1
C
M-1
17
2
B2
E
B-1
10
12
D
B-1
18
8
7
6
3
15
B2
5
19
F
M-1
11
G
M-1
13
20
B2
4
9
B2

P-1. Palmrest

Ref. No.	Part No.		Description
3	1-829-196-11		CABLE, FLEXIBLE FLAT (10PIN)
4	1-829-198-11		CABLE, FLEXIBLE FLAT (10PIN)
5	1-829-195-11		CABLE, FLEXIBLE FLAT (12PIN)
6	1-829-197-11		CABLE, FLEXIBLE FLAT (16PIN)
7	A-1086-979-A	$	COMPLETE PWB LEX-61 (S)
8	A-1086-980-A	$	COMPLETE PWB SWX-172 (S)
9	A-1086-981-A	$	COMPLETE PWB SWX-173 (S)
11	4-683-212-01		COVER PALM
13	4-662-881-02		CUSHION, KEY BOARD
15	2-148-163-02		SHEET LED OTHER
16	1-825-846-11		SPEAKER WITH BOX (L)
17	1-825-846-21		SPEAKER WITH BOX (R)
18	4-683-214-02		SWITCH WL
20	X-4626-773-2		ASSY HOLDER TP
22	4-672-493-01		COVER (SC)
B1	4-672-834-71		SCREW, +B EG GRIP
B2	4-676-936-01		+SCREW,O2 +SPECIAL HEAD SELF S

				J				AM				AO							
Ref.No.	Part No.		Description	S52B/S	S62PS/S*	S62PSY*	S62S/S*	S360P	S360										
2	X-4626-772-4		ASSY PALMREST					●	●										
	X-2048-726-1		ASSY PALMREST [SILVER]	●	●	●	●												
10																			
	4-683-211-11		COVER LED					●	●										
	4-683-211-31		COVER LED	●	●	●	●												
14	1-478-713-12	#	KEYBOARD UNIT (JP)	●	●	●	●												
	1-478-713-22	#	KEYBOARD UNIT (US)		●		●	●	●										
12	4-654-440-22		CUSHION (PALM)					●	●										
	4-654-440-41		CUSHION (PALM)	●	●	●	●												
19	1-796-958-11		TOUCH PAD					●	●										
	1-796-958-31		TOUCH PAD	●	●	●	●												

- This parts list contains two different types of parts.
  The first type is the parts that are common to all models.
  The other type is the parts that are different depending on each model.

- この部品表は，機種共通の部品と，機種によって使い分けが必要な部品に分かれています。

M-1.Main Board

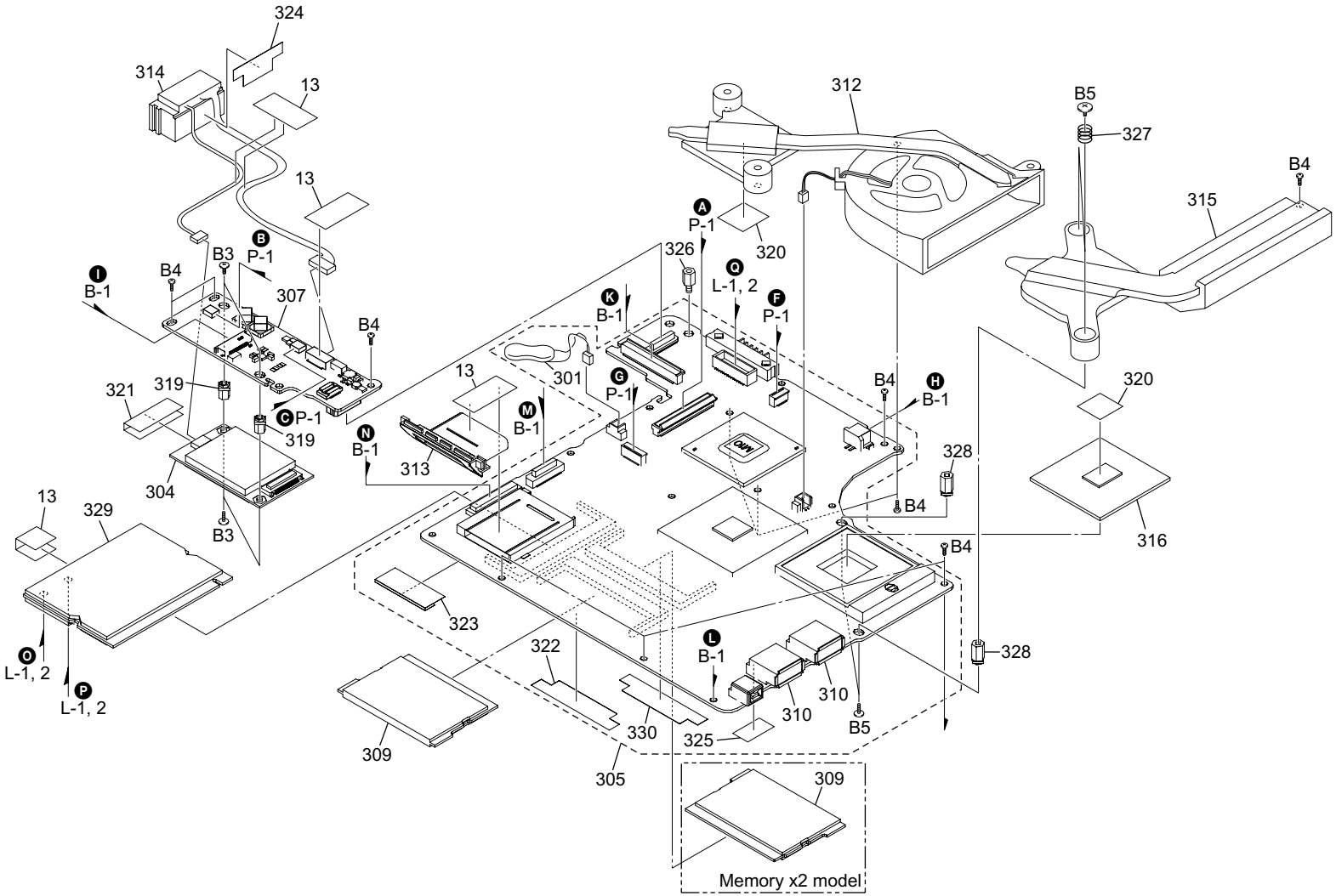

M-1.Main Board

Ref. No.	Part No.			Description
13	4-662-881-02			CUSHION, KEY BOARD
22	4-672-493-01			COVER (SC)
301	1-756-038-21			BATTERY, NICKEL HYDROGEN
304	1-761-606-15		#	CARD, MODEM
307	A-1086-977-A	$		COMPLETE PWB IFX-311 (S)
310	1-794-548-21			CONNECTOR, USB(A)
312	1-787-166-12			D.C. FAN
313	4-683-176-01			ESCUTCHEON MS
314	1-962-758-11			HARNESS, RJ-45/11
315	4-683-233-01			HEATSINK UNIT
319	4-655-326-01			OFF, STAND
320	2-023-990-01			SHEET (THERMAL)
321	2-059-468-01			SHEET MDC
322	4-677-165-01			SHEET MEMORY
323	2-109-082-01			SHEET MS
324	2-109-080-01			SHEET RJ-CON
325	2-059-469-01			SHEET USB
326	4-651-989-51			SPACER (MBX)
327	2-102-944-01			SPRING HEATSINK
328	2-050-130-01			STAND (OFF)
330	2-148-340-01			CAUTION (LABEL) (MEMORY)
B3	4-672-836-01			SCREW, M2 SPECIAL HEAD,EG GRIP
B4	4-672-834-51			SCREW, +B EG GRIP
B5	2-050-159-01			M2 SPECIAL HEAD D7,T1

					J				AM				AO						
Ref.No.	Part No.			Description	S52B/S	S62PS/S*	S62PSY*	S62S/S*	S360P	S360									
305	A-1086-972-A	$	#	COMPLETE PWB MBX-109 (M11) (S)					●	●									
	A-1086-974-A	$	#	COMPLETE PWB MBX-109 (M9) (S)	●	●	●	●											
309	A-1072-479-A		#	COMPLETE PWB MM-11A (S)	●	●	●	●											
	A-1072-478-A		#	COMPLETE PWB MM-9S (S)		●	●	●	●	●									
316	6-600-306-01			IC RH80536GC0332MSL7EN		●		●											
	6-600-343-01			IC RH80536GC0292MSL7EP					●	●									
	6-600-355-01			IC RH80536GC0252MSL7EG	●	●	●	●											
	6-707-254-01			ICRH80536GC0452MSL7V3		●	●	●											
	6-707-263-01			IC RH80536NC0171MSL7LS		●	●	●											
329	1-761-864-15		#	WIRELESS LAN CARD					●	●									
	1-761-864-25		#	WIRELESS LAN CARD	●	●	●	●											

- This parts list contains two different types of parts.
  The first type is the parts that are common to all models.
  The other type is the parts that are different depending on each model.
- この部品表は，機種共通の部品と，機種によって使い分けが必要な部品に分かれています。
- When change the CPU (ref. 316), refer to "Replacing the CPU" in CHAPTER 5.
- CPU（Ref. 316）を交換する際には，CHAPTER 5の「Replacing the CPU」をご参照下さい。

B-1. Bottom

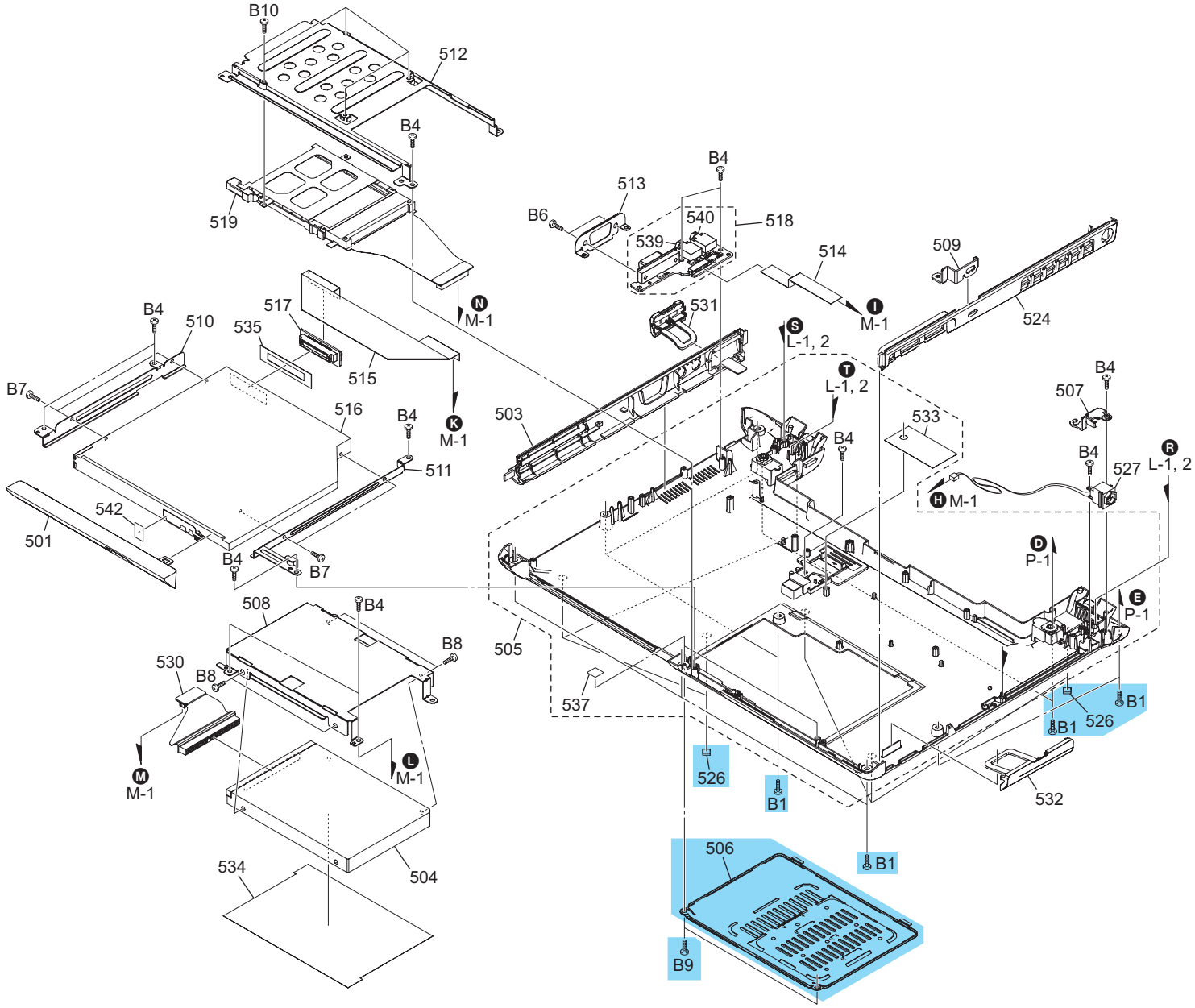
B10
512
B4
519
B4
513
B6
540
518
539
514
509
524
N
M-1
531
I
M-1
S
L-1, 2
T
L-1, 2
B4
510
517
535
515
B7
516
B4
K
M-1
503
533
507
B4
B4
527
R
L-1, 2
511
H
M-1
542
501
B4
B7
D
P-1
E
P-1
508
B4
B8
505
530
B8
537
B1
526
B1
M
M-1
L
M-1
526
B1
532
506
B1
534
504
B9

B-1. Bottom

	Ref. No.	Part No.			Description
	503	X-4626-768-2			ASSY ESCUTCHEON L
	505	X-4626-767-3			ASSY HOUSING BOTTOM
	506	X-4626-769-2		&	ASSY LID DIMM
	507	2-024-006-01			BRACKET DC JACK
*	508	4-683-189-02			BRACKET HDD
*	509	4-683-190-01			BRACKET KENJINGTON
*	510	4-683-231-01			BRACKET OPT L
*	511	4-683-232-01			BRACKET OPT R
*	512	4-683-191-03			BRACKET PCCARD
*	513	4-683-192-01			BRACKET VGA
	514	1-829-199-11			CABLE, FLEXIBLE FLAT (18PIN)
	515	1-829-200-11			CABLE, FLEXIBLE FLAT (50PIN)
	517	A-1086-975-A	$		COMPLETE PWB CNX-251 (S)
	518	A-1086-976-A	$		COMPLETE PWB CNX-261 (S)
	519	1-818-398-12			CONNECTOR, FPC WITH PC CARD
	524	4-683-196-01			ESCUTCHEON R
	526	4-683-197-01		&	FOOT
	527	1-962-849-11			HARNESS (DC JACK WITH 2P)
	530	1-862-745-11			PWB, FLEXIBLE PRINT (HDD)
	531	4-683-188-01			RUBBER DOOR MODEM
	532	4-683-186-01			RUBBER DOOR USB
	533	2-023-589-01			SHEET BOTTOM
	534	2-023-591-01			SHEET HDD
	535	2-059-467-01			SHEET OPT
	537	4-659-711-12			SHEET (BOSS)
	539	1-694-760-21			JACK, SMALL TYPE
	540	1-694-760-41			JACK, SMALL TYPE
	542	4-659-711-02			SHEET (BOSS)
	B1	4-672-834-71		&	SCREW, +B EG GRIP
	B4	4-672-834-51			SCREW, +B EG GRIP
	B6	4-674-716-01			SCREW (NO.4-40) (UNC)
	B7	4-671-538-01			SCREW(M2X4), SPECIAL HEAD
	B8	4-672-839-01			HEAD, M3 FLAT
	B9	4-673-648-01		&	GRIP, M2 (+B) (EG)
	B10	2-050-180-01			+SCREW,O2 +SPECIAL HEAD

				J				AM				AO						
Ref.No.	Part No.			Description	S52B/S	S62PS/S*	S62PSY*	S62S/S*	S360P	S360								
501																		
	X-2024-607-1			ASSY BEZEL OPT COMBO	●	●	●	●	●	●								
	X-2048-636-1			ASSY BEZEL OPT MLT		●	●	●										
504	A-1087-149-A	$	#	HDD (MK4025GAS-40GB) (S)		●	●	●										
	A-1065-272-A	$	#	HDD (MK6025GAS-60GB) (S)	●	●		●										
	A-1083-189-A	$	#	HDD (MHT2080AT-80GB) (S)		●		●	●	●								
	A-1083-188-A	$	#	HDD (MHU2100AT-100GB) (S)		●		●										
516																		
	1-797-054-11	$	#	COMBO DRIVE(UJDA765,9.5MM)	●	●	●	●	●	●								
	1-797-057-11	$	#	DVD+-RW (UJ-822,9.5MM)		●	●	●										

- This parts list contains two different types of parts.
  The first type is the parts that are common to all models.
  The other type is the parts that are different depending on each model.

- この部品表は，機種共通の部品と，機種によって使い分けが必要な部品に分かれています。

L-1. LCD 13.3-inch WXGA (Brighter)

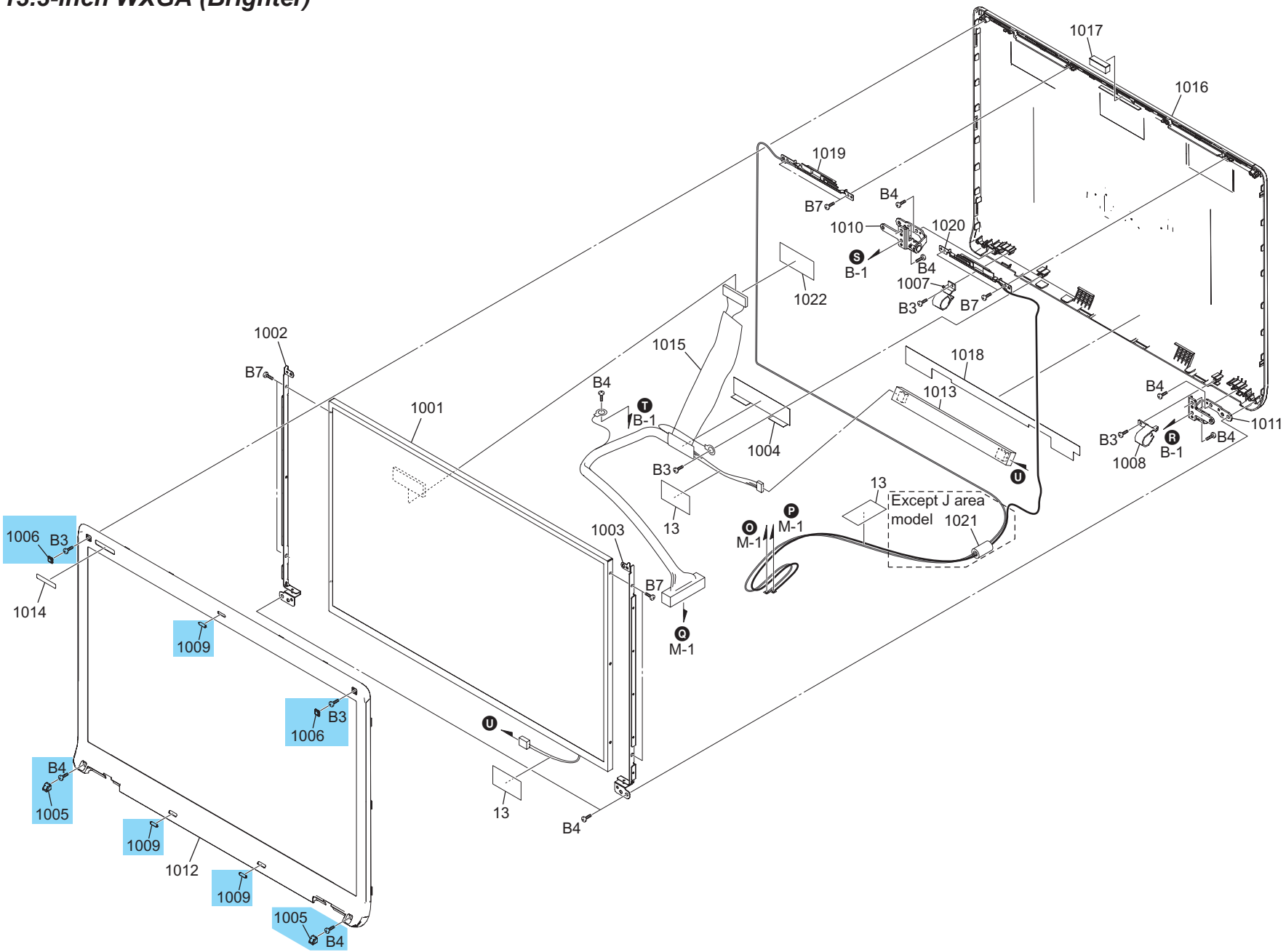

L-1. LCD 13.3-inch WXGA (Brighter)

	Ref. No.	Part No.		Description
	13	4-662-881-02		CUSHION, KEY BOARD
	1001	A-1072-481-A	$ #	LCD UNIT(13.3 WXGA) (S)
*	1002	4-683-218-01		BRACKET LCD L
*	1003	4-683-219-01		BRACKET LCD R
	1004	4-673-031-01		COPPER TAPE(LCD)
	1010	4-683-225-02		HINGE L
	1011	4-683-226-02		HINGE R
	1013	1-477-753-13		INVERTER UNIT
	1015	1-962-761-12		LCD HARNESS
	1017	2-024-668-01		MAGNET (LID)
	1018	2-067-394-01		SHEET CABLE WLL
	1019	1-754-331-22		ANTENNA (2.4/5GHZ FOR LEFT)
	1020	1-754-331-12		ANTENNA (2.4/5GHZ FOR RIGHT)
	1022	-		FILAMENT TAPE 12X30
	B3	4-672-836-01	<&>	SCREW, M2 SPECIAL HEAD,EG GRIP
	B4	4-672-834-51	<&>	SCREW, +B EG GRIP
	B7	4-671-538-01		SCREW(M2X4), SPECIAL HEAD

	J			AM					AO						
	S52B/S	S62PS/S	S62S/S	S360P	S360										
Ref.No. Part No. & Description															
1005 4-683-220-01 & COVER DISPLAY SCREW LO				●	●										
4-683-220-11 & COVER DISPLAY SCREW LO [SILVER]	●	●	●												
1006 4-683-221-01 & COVER DISPLAY SCREW UP				●	●										
4-683-221-11 & COVER DISPLAY SCREW UP [SILVER]	●	●	●												
1007 4-683-222-01 COVER HINGE L				●	●										
4-683-222-11 COVER HINGE L [SILVER]	●	●	●												
1008 4-683-223-02 COVER HINGE R				●	●										
4-683-223-11 COVER HINGE R [SILVER]	●	●	●												
1009 4-683-224-01 & CUSHION BEZEL				●	●										
4-683-224-11 & CUSHION BEZEL [SILVER]	●	●	●												
1012 4-683-217-03 HOUSING BEZEL				●	●										
4-683-217-11 HOUSING BEZEL [SILVER]	●	●	●												
1014 2-581-144-01 LABEL ID (J)		●													
2-581-144-11 LABEL ID (J)			●												
2-581-144-21 LABEL ID (J)	●														
2-581-193-01 LABEL ID (UD)				●											
2-581-193-11 LABEL ID (UD)					●										
1016 A-1101-121-A ASSY DISPLAY (S)				●	●										
A-1099-489-A ASSY DISPLAY SILVER (S)	●	●	●												
1021 1-400-255-11 FERRITE CORE				●	●										

- This parts list contains two different types of parts.
  The first type is the parts that are common to all models.
  The other type is the parts that are different depending on each model.

- この部品表は，機種共通の部品と，機種によって使い分けが必要な部品に分かれています。

L-2. LCD 13.3-inch WXGA

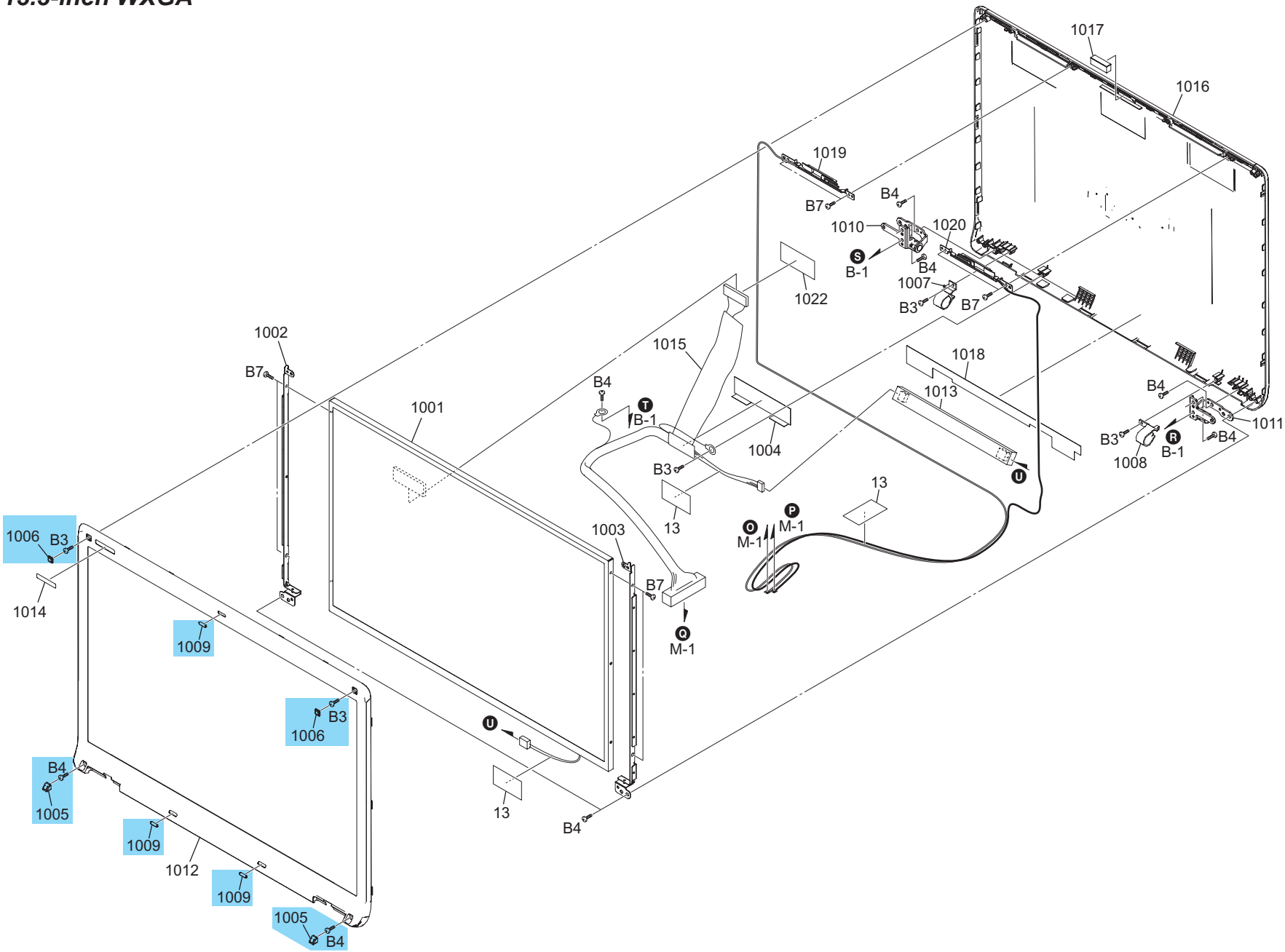

L-2. LCD 13.3-inch WXGA

	Ref. No.	Part No.		Description
	13	4-662-881-02		CUSHION, KEY BOARD
*	1002	4-683-218-01		BRACKET LCD L
*	1003	4-683-219-01		BRACKET LCD R
	1004	4-673-031-01		COPPER TAPE(LCD)
	1005	4-683-220-11	&	COVER DISPLAY SCREW LO [SILVER]
	1006	4-683-221-11	&	COVER DISPLAY SCREW UP [SILVER]
	1007	4-683-222-11		COVER HINGE L [SILVER]
	1008	4-683-223-11		COVER HINGE R [SILVER]
	1009	4-683-224-11	&	CUSHION BEZEL [SILVER]
	1010	4-683-225-02		HINGE L
	1011	4-683-226-02		HINGE R
	1012	4-683-217-11		HOUSING BEZEL [SILVER]
	1013	1-477-753-13		INVERTER UNIT
	1015	1-962-761-12		LCD HARNESS
	1016	A-1099-489-A		ASSY DISPLAY SILVER (S)
	1017	2-024-668-01		MAGNET (LID)
	1018	2-067-394-01		SHEET CABLE WLL
	1019	1-754-331-22		ANTENNA (2.4/5GHZ FOR LEFT)
	1020	1-754-331-12		ANTENNA (2.4/5GHZ FOR RIGHT)
	1022	-		FILAMENT TAPE 12X30
	1101	A-1072-480-A	$ #	LCD UNIT(13.3 WXGA) NML (S)
	B3	4-672-836-01	<&>	SCREW, M2 SPECIAL HEAD,EG GRIP
	B4	4-672-834-51	<&>	SCREW, +B EG GRIP
	B7	4-671-538-01		SCREW(M2X4), SPECIAL HEAD

Ref.No.	Part No.	Description	J		
			S62PS/S*	S62PSY*	S62S/S*
1014	2-581-144-01	LABEL ID (J)	●		
	2-581-144-11	LABEL ID (J)			●
	2-581-144-31	LABEL ID (J)		●	

- This parts list contains two different types of parts.
  The first type is the parts that are common to all models.
  The other type is the parts that are different depending on each model.

- この部品表は，機種共通の部品と，機種によって使い分けが必要な部品に分かれています。

A-1. Accessories

2001
AC Adaptor

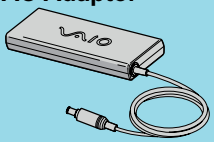

2003
Battery

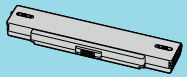

2004
L Battery

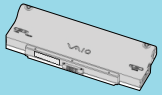

2010
Power Cord

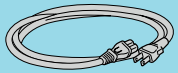

2008
Power Cord

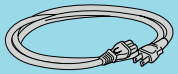

Ref.No.	Part No.			Description	J				AM				AO						
					S52B/S	S62PS/S*	S62PSY*	S62S/S*	S360P	S360									
⚠ 2001	1-477-749-53	$	&	ADAPTOR, AC	●	●	●	●											
⚠	1-478-860-21	$	&	ADAPTOR,AC					●	●									
⚠ 2003	A-1072-505-A	$	&	BATTERY PACK BPS2 (J) (S)	●	●	●	●											
⚠	A-1072-506-A	$	&	BATTERY PACK BPS2 (U) (S)					●	●									
⚠ 2004	A-1072-508-A	$	&	BATTERY PACK BPL2 (J) (S)		●		●											
⚠ 2008	1-829-237-21		&	CORD, POWER					●	●									
⚠ 2010	1-827-160-21		&	POWER-SUPPLY CORD	●	●	●	●											
-	2-584-065-01		&	Instruction Manual (XP Professional, XP Home Edition)	●	●	●	●											
-	2-586-763-01			QUICK START (S) (EN) (JDS)					●	●									

- This parts list contains two different types of parts.
  The first type is the parts that are common to all models.
  The other type is the parts that are different depending on each model.

- この部品表は，機種共通の部品と，機種によって使い分けが必要な部品に分かれています。

5-1. The Barcode Label

The hatched portion of the barcode is used as the repair data.
バーコードラベルの網掛け部は，修理データとして使用いたします。

[MBX-109 Board]
(Side A)

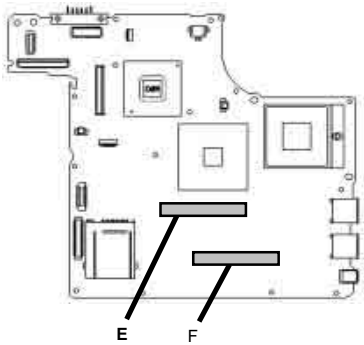

[MBX-109 Board]
(Side B)

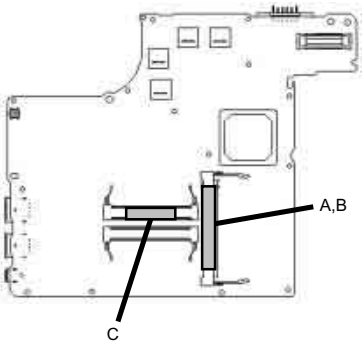

[LCD Unit]
(Rear)

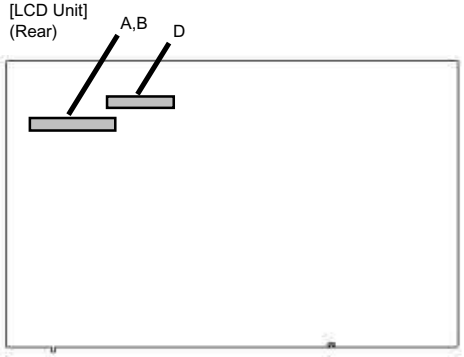

[MM-9 Board]
(Side A)

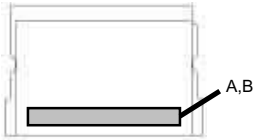

[MM-11 Board]
(Side A)

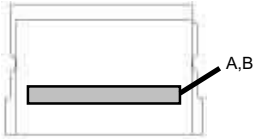

[Keyboard Unit]
(Rear)

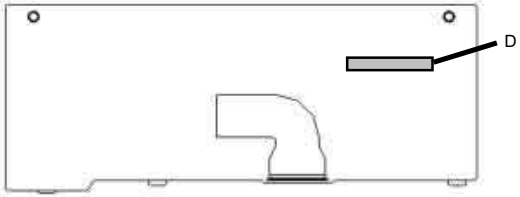

[Drive]
(Top)

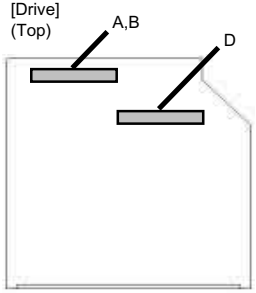

[MODEM Card]

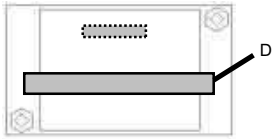

[W-LAN Card (intel)]

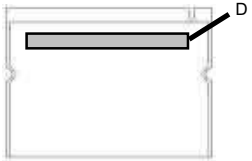

[W-LAN Card (ambit)]

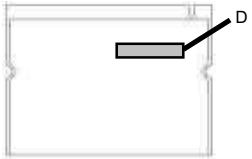

[HDD (TOSHIBA)]
(Top)

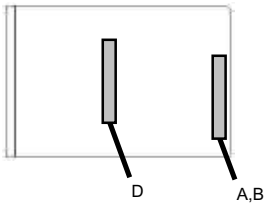

[HDD (HITACHI / IBM)]
(Top)

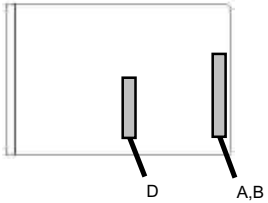

[HDD (FUJITSU)]
(Top)

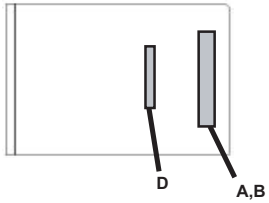

A : Part No.
B : Serial No.
C : Revision No.
D : Maker Barcode
E : Global User ID (iLink)
F : Mac Address

Confidential

5-2. Replacing the CPU

Note: We have two kinds of CPU for this set, and either of them is used.
Two kinds of CPU have differences in the lock position and the unlock position.

1. Socket configuration 1

1. How to remove the CPU

① Rotate the lock with a flat-blade screwdriver toward the unlock position shown in the figure.
② Remove up the CPU.

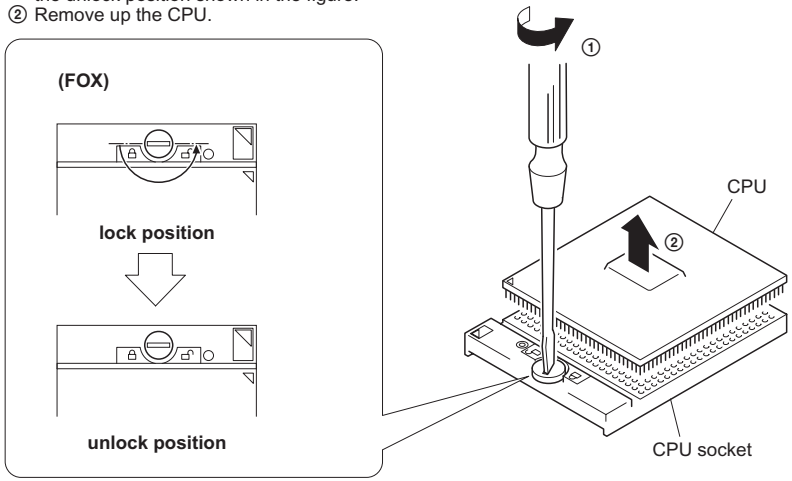

2. How to install the CPU

① Position the mark on the CPU to the mark on the CPU socket and put in all pins to the holes on the CPU socket.
② Pressing two corners marked with ◯ in the figure, rotate the lock with a flat-blade screwdriver toward the lock position.

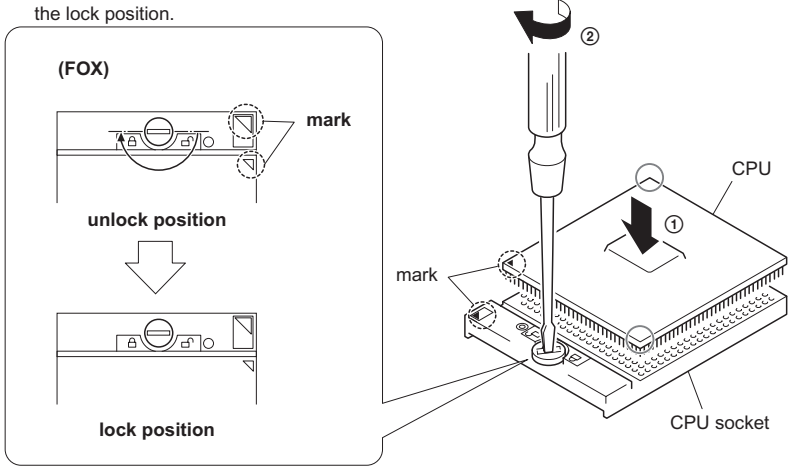

Note: Lock the CPU properly, or operation becomes unstable.

2. Socket configuration 2

1. How to remove the CPU

① Rotate the lock with a flat-blade screwdriver toward the unlock position shown in the figure.
② Remove up the CPU.

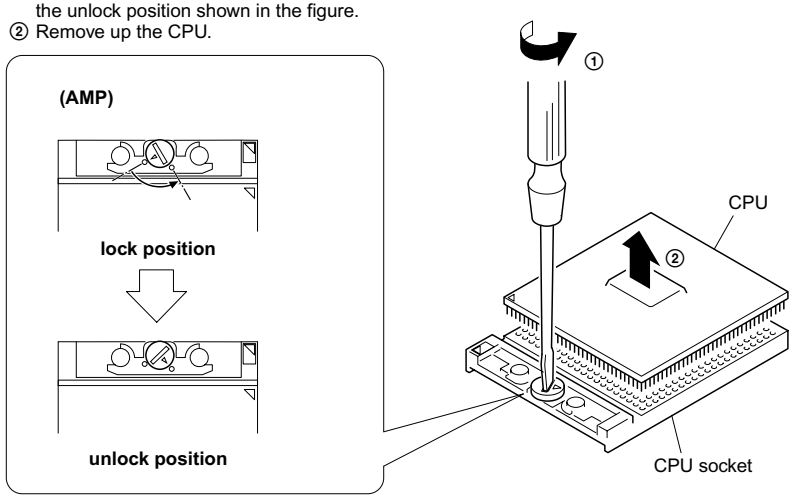

2. How to install the CPU

① Position the mark on the CPU to the mark on the CPU socket and put in all pins to the holes on the CPU socket.
② Pressing two corners marked with ◯ in the figure, rotate the lock with a flat-blade screwdriver toward the lock position.

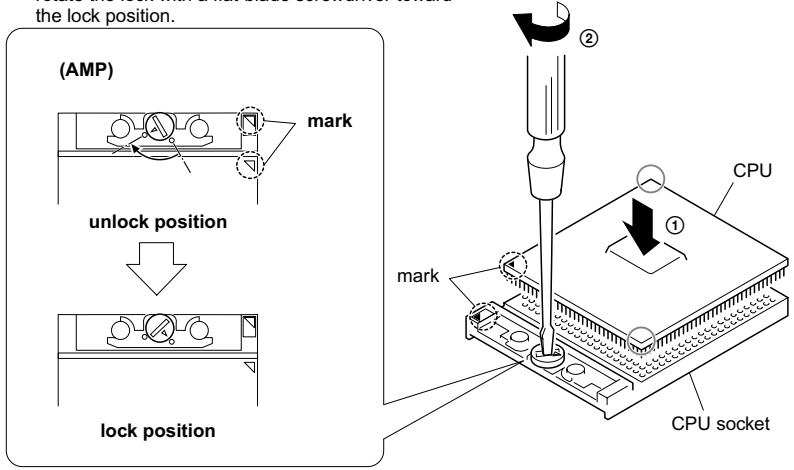

Note: Lock the CPU properly, or operation becomes unstable.

Confidential

List of VGN-S Series (As of January, 2005)

Service Manual Part No.	Model Name			
	J	AM	EU	AO
9-876-369-XX	VGN-S50B VGN-S70B VGN-S90PS∗ VGN-S90S∗	VGN-S150 VGN-S150F VGN-S150FP VGN-S150P VGN-S170∗ VGN-S170B∗ VGN-S170F VGN-S170P∗	VGN-S1HP VGN-S1VP VGN-S1XP	VGN-S16C VGN-S16GP VGN-S16LP VGN-S16SP VGN-S16TP VGN-S17C VGN-S18CP VGN-S18GP VGN-S18LP VGN-S18SP VGN-S18TP
9-876-391-XX	VGN-S51B VGN-S61PZ VGN-S71PB VGN-S91PS∗ VGN-S91S∗	VGN-S240P VGN-S250F VGN-S250FP VGN-S260 VGN-S260P VGN-S270∗ VGN-S270B∗ VGN-S270F VGN-S270P∗	VGN-S2HP VGN-S2HRP VGN-S2VP VGN-S2XP VGN-S2XRP	VGN-S25C VGN-S26C VGN-S26GP VGN-S26LP VGN-S26SP VGN-S26TP VGN-S27C VGN-S28CP VGN-S28GP VGN-S28LP VGN-S28SP VGN-S28TP
9-876-402-XX	VGN-S52B/S VGN-S62PS/S∗ VGN-S62PSY∗ VGN-S62S/S∗	VGN-S360 VGN-S360P		

∗ : CTO Model
☜ : Additional Models

This manual and the constituent data may not be replicated, copied nor reprinted in whole or in part without prior written authorization of Sony Corporation.

本マニュアルの一部，または全部について，無断でデータの複製，複写，転載することを禁じます。

9-876-402-01

English/Japanese
2005A0500-1
© 2005 Sony Corporation
Published by Sony EMCS VAIO-GSC [N]

Revision History

Suffix	Ver.	Date	Contents	QM No.
-01	Ver. 1	2005.01.13	First Edition	

<Remarks>